Module 3 Assignment
Bandgap Reference Design

BGR Schematic

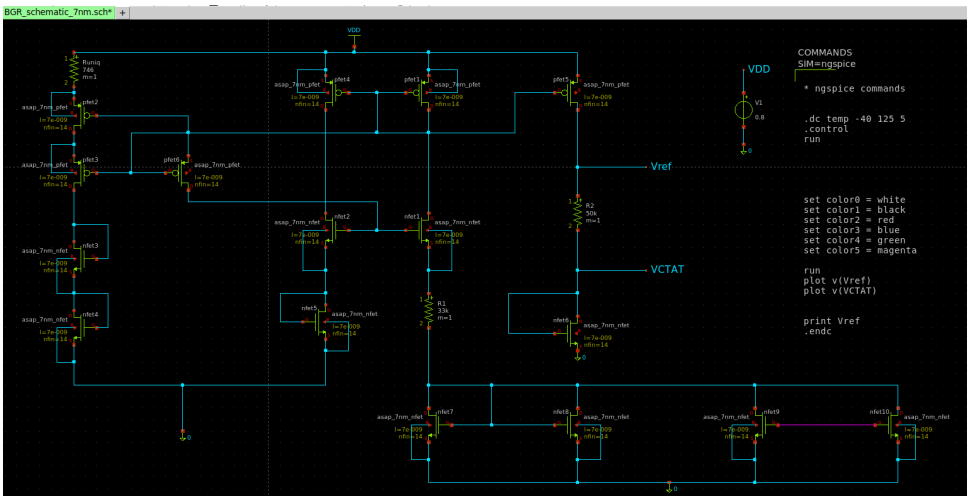

Characterization Table

S.No	VDD (V)	Temp (°C)	Vref (V)	Line Reg. (mV/V)	Startup Time (ns)
1	0.8	27	0.671	1010	16.1
2	0.9	27	0.772	1010	17.8
3	1.0	27	0.873	1010	20.2
4	1.0	-40	0.824	-	20.2
5	1.0	125	0.920	-	20.2

Unique SPICE Deck

BGR_schematic_7nm.spice

```
** sch_path: /home/vsduser/Desktop/asap_7nm_Xschem/BGR_schematic_7nm.sch
**.subckt BGR_schematic_7nm
Xpfet1 net3 net3 VDD VDD asap_7nm_pfet l=7e-009 nfin=14
Xpfet2 net10 net3 net11 net11 asap_7nm_pfet l=7e-009 nfin=14
Xpfet3 net1 net3 net10 net10 asap_7nm_pfet l=7e-009 nfin=14
Xpfet4 net9 net3 VDD VDD asap_7nm_pfet l=7e-009 nfin=14
Xpfet5 Vref net3 VDD net12 asap_7nm_pfet l=7e-009 nfin=14
Xpfet6 net4 net3 net3 net13 asap_7nm_pfet l=7e-009 nfin=14
Xnfet2 net9 net4 net5 net5 asap_7nm_nfet l=7e-009 nfin=14
Xnfet3 net1 net1 net2 net2 asap_7nm_nfet l=7e-009 nfin=14
Xnfet4 net2 net2 0 0 asap_7nm_nfet l=7e-009 nfin=14
Xnfet5 net5 net5 0 0 asap_7nm_nfet l=7e-009 nfin=14
Xnfet6 VCTAT VCTAT 0 net14 asap_7nm_nfet l=7e-009 nfin=14
Xnfet7 net7 net7 0 0 asap_7nm_nfet l=7e-009 nfin=14
Xnfet8 net7 net7 0 0 asap_7nm_nfet l=7e-009 nfin=14
Xnfet9 net7 net8 0 0 asap_7nm_nfet l=7e-009 nfin=14
Xnfet10 net7 net8 0 0 asap_7nm_nfet l=7e-009 nfin=14
Xnfet1 net3 net4 net6 net6 asap_7nm_nfet l=7e-009 nfin=14
R1 net6 net7 33k
R2 Vref VCTAT 50k
V1 VDD 0 0.8
Runiq VDD net11 746
**** begin user architecture

.dc temp -40 125 5
.control
run

set color0 = white
set color1 = black
set color2 = red
set color3 = blue
set color4 = green
set color5 = magenta

run
plot v(Vref)
plot v(VCTAT)


print Vref
.endc
```
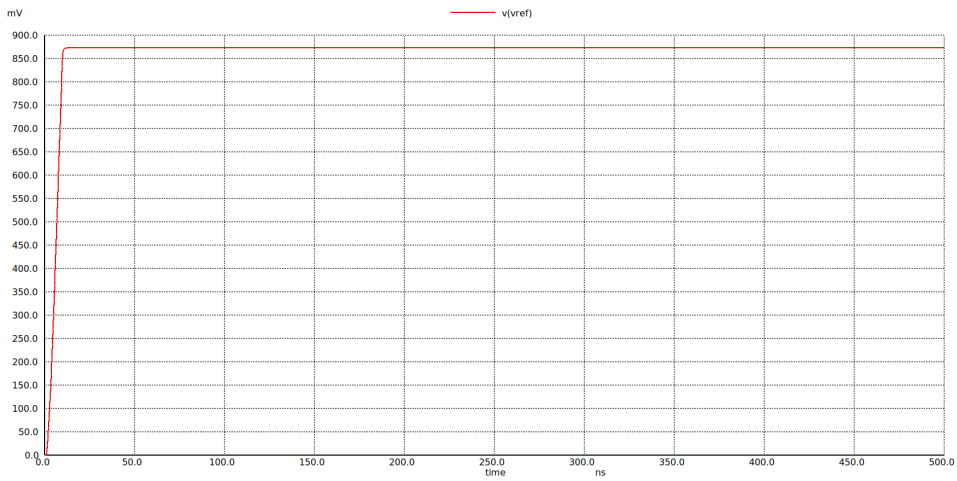
BGR Transient waveform